TIPVALVE INDUSTRIAL GROUP LTD

Factory Add:Sanqiao Industrial Zone , Oubei Town, Wenzhou,China
Sales Dept:1706 International Trade Centre,No.8 Liming Rd(w).Wenzhou,China.
Tipvalve :Your Professional Valve Solution
Tel:+86-577-8873 2275 Fax:+86-577-8873 2276
Website:www.tipvalve.com
E-mail:sales@tipvalve.com valvetrade@126.com

TIPVALVE INDUSTRIAL GROUP LTD

BALL VALVE

Your Professional Valve Solution
www.tipvalve.com

Brief Introduction

Tipvalve was set up in 1985 and is located in Sanqiao Industrial Zone, Wenzhou , China. It holds asset up to over ten million US$ and is one of the 20 top powerful enterprises in the Pump & Valve Capital Of China and one of the largest enterprise of the valve industry of China.

In the past over 20 years, We have developed enormously not only in common industrial utility valves such as butterfly valves, ball valves, gate valves and globe valves etc. but also in hydraulic control valves. The company now functions developing, producing, assembling, sale and after-service as one concerted mechanism and is specialized in manufacturing valves. Our main products are butterfly valve, ball valve, control valve, gate ,globe and other valve with working pressure varying from 150Lb~2500Lb(0.1MPa~42MPa),the diameter from 1/4"~80"(DN6~DN2000),the working temperature from -196℃~680℃ strictly according to the standards of ANSI,API,JIS,BS used for infrastructure project, petroleum, chemical industry ,power station, metallurgy ,national defense, scientific research etc .fields.

Our company practices professional production while with multi-brand sales strategy. We now have 5 professional subsidiary factories separately specially for butterfly valve, ball valve , gate ,globe and other valve , control valve and pneumatic actuator, owning famous brands such as Tipvalve, HT , LYV, Naisen ,CXFM, HPV etc. We have been accredited to internationally well-known DNV'S IS9001 Quality System approval, API certification and CE certification. We have set up more than 20 domestic sales branches and one international trading company(Uk Gaoneng Valve Co.,LTD) with an annual sales up to 15 million US$.

With more than 300 excellent staff members, top class equipments and excellent post-sale service, Gaoneng valvers are highly devoted to providing professional valve solution to the world, confident of constructing top class valve manufacturer!

TIP

TIPVALVE INDUSTRIAL GROUP LTD

Your Professional Valve Solution
www.tipvalve.com

PRODUCTS GALAXY

PRODUCTS GALAXY

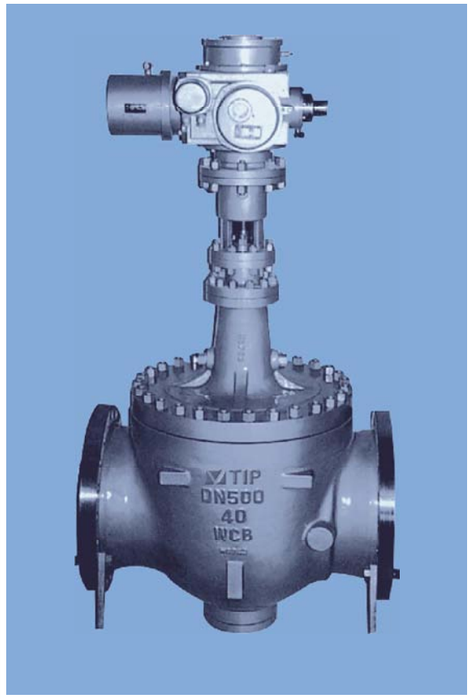

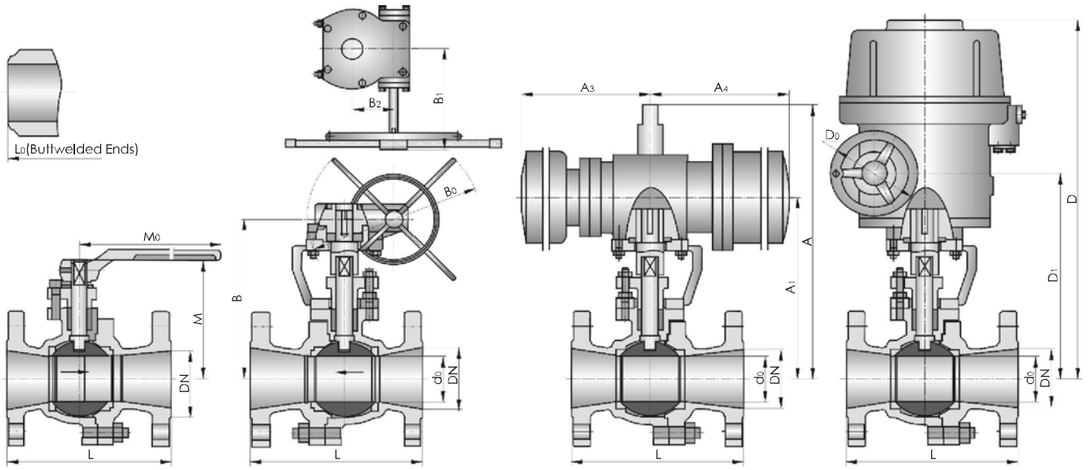

Lever Operated Worm Gear Operated Penumatic Operated Eletric Operated

Main Outline Dimensions

PN6.4/10.0MPa Class400/600 mm

DN (mm)	NPS (in)	d0	L	L0	Handwheel		Worm Gear/Lever				Penumatic				Eletric			Weight(kg) (RF)		
			RF	BW	M	M0	B	B0	B1	B2	A	A1	A3	A4	D	D1	D0	Handwheel	Penumatic	Eletric
20	3/4×1/2	15	190	190	59	160	-	-	-	-	200	122	283	136	-	-	-	8	15	-
25	1×3/4	20	216	216	63	160	-	-	-	-	204	145	283	181	-	-	-	11	22.7	-
40	1 1/2×1 1/4	32	241	241	75	230	-	-	-	-	241	146	283	181	-	-	-	15	29	-
50	2×1 1/2	40	292	292	95	400	-	-	-	-	264	169	350	181	-	-	-	19	33	-
65	2 1/2×2	50	330	330	142	400	-	-	-	-	340	209	590	257	472	377	190	25	39	60
80	3×2 1/2	65	356	356	154	650	-	-	-	-	379	248	590	257	599	391	190	48	91	83
100	4×3	80	406 (432)	406 (432)	184	650	292	400	350	115.5	452	295	523	287	599	449	190	76	119	111
150	6×4	100	495 (559)	495 (559)	209	1050	398	600	421	171	584	375	610	378	632	472	190	85	187.5	120

Note: Dimensions marked with bracket ( ) are Face to Face dimensions of valves rated PN10.00 (Class600).

Structural Features of Trunnion Ball Valve

Trunnion ball valves are mainly used in the industries of natural gas, oil products, chemicals, metallurgy, urban construction, environmental protection, pharmaceuticals, foodstuff and etc. Among them, the sulfur-resisting series products are applicable for seriously corrosive natural gas pipeline containing hydrogen sulphide mediums and impurities.

1. Distinctive Seating Structure

According to the extent of pressure, medium properties and sealing requirements, fixed ball valves may be made to front seal structure, back seal structure, or front-back dual seal structure.

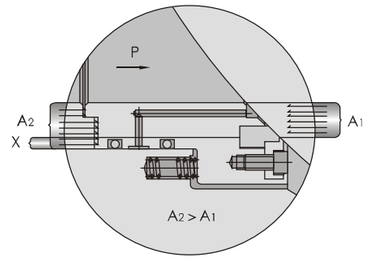

Inlet Side

●Front Seal Structure

The front seal structure of valve seat gives the functions of two way seal and self-relieving function at middle cavity. As shown in the figure, the sealing socket inlaid with appropriate polymeric material (high molecular material of NYLON, MOLON, DELRIN or PEEK) is float. With spring loaded, when closed, the sealing face remains always in close contact with the ball, thus to ensure leak-tightness under whatever high or low differential pressure. Upstream: valve seat moves axially along with the valve, the upstream (inlet) pressure P applied to A_2 produces a directional force on A_1. As A_2 is larger than A_1, A_2-A_1=X, so the pressure on X will push the valve seat toward the ball to actualize close seal at upstream. Downstream: in case the pressure inside valve cavity Pb rises, the force acted upon A_3 will be greater than that upon A_4, A_3-A_4=X_2. The differential pressure formed up on X_2 will overcome the spring force and make valve seat separated from ball, and then, the valve seat will be closed to the ball again under spring action.

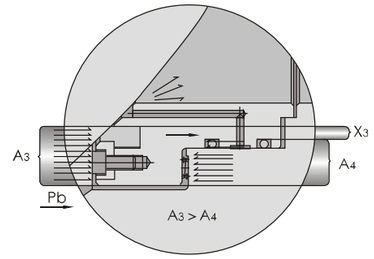

Outlet Side

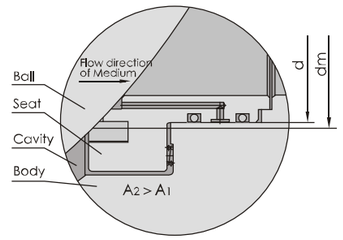

Outlet Side

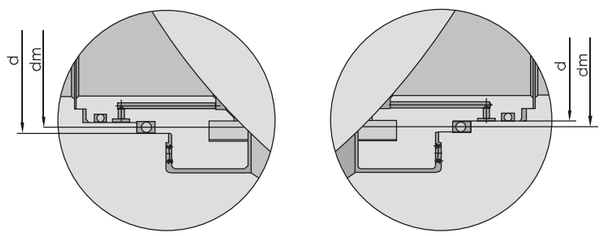

Inlet Side Outlet Side

Front-Back Seal Structure

●Back Seal Strcture

The piston effect at valve seat produced by the area difference between 'd' and 'dm' (see figure on the right) will make seating seal ring and ball closely contacted and sealed under the medium action at the middle cavity of valve body.

●Front-back Seal Structure

At the inlet inside, the piston effect at valve seat produced by the area difference between 'd' and 'dm' will make seating seal ring and ball closely contacted and sealed under the medium action at upstream. At the outlet side, the piston effect produced by the area difference between 'd0' and 'dm' will make seating seal ring and ball closely contacted and sealed under the action of medium pressure at the middle cavity of valve body.

2. Self-relieving Structure

In case of abnormal rise of pressure at middle cavity, ball valve of single seal structure is provided with self-relieving function, while ball valve of dual seal structure uses the auxiliary pressure relief device on valve body to carry out pressure relief.

3. First Aid of Seal

The valve is designed with an auxiliary seating emergency seal system, as shown in the figure. In case of soft seal damaged, or failure of seal in an emergency circumstances, emergency seal may be effected by injecting in sealant through auxiliary sealing system. If needed, emergency seal assembly can be used to rinse and lubricate the seating area. Plus, valve stem can also be designed with an auxiliary emergency sealing system.

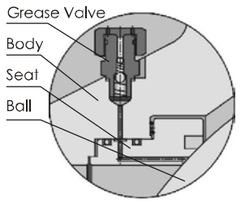

Seating Auxiliary Seal

4. Fireproof Structure

If requested by working conditions and users, ball valve may be designed to fireproof. The fireproofing design of ball valve is to the standards of API607 and JB/T6899. In case of soft seal ring burnt in fire, the fire protection structure of ball valve functions to prevent mediums from mass leakage, thus to avoid fire spreading.

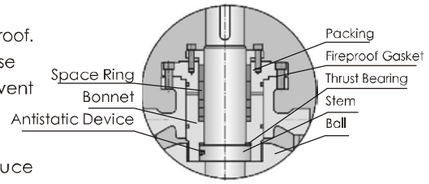

Stem Anti-flyout Structure
Stem Antistatic Device
Bonnet Leak-tight Structure

5. Antistatic Structure

When operating the valve, the friction between the ball and seat will produce electrostatic charge that can be accumulated on the ball. To prevent static spark, an antistatic device is placed on the valve to derive the electric charge accumulated on the ball (as shown in the figure).

6. Locking Device

To prevent misoperation and the unexpected open or close caused by the unpredicted circuit vibration, a locking device is designed at the fully opened and closed positions of hand operated ball valve. This design is proven especially good and effective in the production line of inflammable mediums of petroleum and chemicals, or when valves are mounted outdoors.

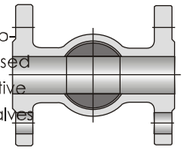
Full-bore Channel Type

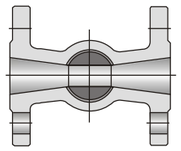
Reduced-bore Channel Type

7. Full and Reduced Bore Structure

To meet the different requirements of users, we have full and reduced bore ball valves series (as shown in the figure). The inside diameter of full-bore ball valve is in conformity with that of the pipe for the convenience of cleaning, while reduced-bore series ball valve is comparatively lighter in weight, but its fluid resistance is only 1/7 of that of globe valve of the same caliber. So, reduced-bore ball valves boast of broader prospects.

8. Discharge Device on Valve Body

If requested by users or by the system, discharge valve may be mounted on the body of ball valve. In case the two ends of valve have been sealed, the pressure in valve will be released through the discharge valve on the body. Besides the function of DBB, this discharge valve also functions to rinse and blow out the deposits inside valve body.

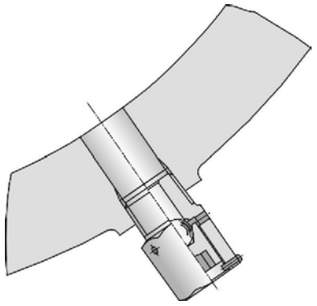
Discharge Device

9. Corrosion Resistance

Corrosion allowance is left for the design of body thickness, the stem, fixed shaft, ball, seat and bottom cover of carbon steel valve are all chemical plated in surface to ASTM B733 and B656. Use of paint from international co. to deal with all kinds of conditions.

10. Sulfide Stress Cracking Resistance

The materials exposed to fluid of our sulfur resisting ball valves, including fastening components, are all selected to NACE MR0175. Rigorous quality control and inspection is implemented in the manufacturing process to make our products conformed to the standard and suitable for vulcanizing conditions.

11. Extension Bar Device

Extension device may be provided for buried ball valves, which include the extension of valve stem, greasing valve and discharge valve. As shown in the figure on the right, users shall specify the requirements and length to be extended (The length is generally the distance from the center of valve channel to the center of operating device).

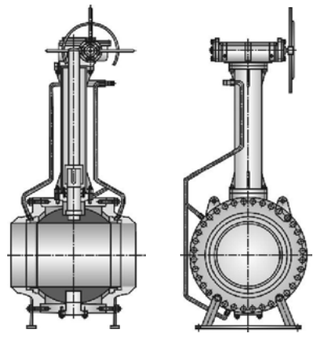
Extension Bar Device

Torque Chart (N.M)

The torque ratings listed below are for the reference to choose a drive device. The properties of medium, trims and valve open frequency shall be considered as extra factors. For instance, valves with corrosion-resistant trims to deal with clean lubricating mediums, their torque may be lowered by 20%. However, to deal with stringent mediums like slurry, granular medium and oxygen, the torque may be increased by 50%. The operating torque of drawing-down valves is subject to the corresponding diameter to their neckings.

Size		PN(MPa)					Pressure Class						
DN	NPS	1.6	2.5	4.0	6.4	10.0	150	300	400	600	900	1500	2500
50	2	25	30	50	100	190	57	99	-	168	228	390	589
65	2 1/2	50	60	100	200	360	-	-	-	-	-	-	-
80	3	65	80	150	300	460	122	212	-	360	512	831	1577
100	4	125	140	250	400	770	192	335	467	572	946	1524	1965
125	5	250	300	450	650	1050	-	-	-	-	-	-	-
150	6	340	400	585	890	1980	274	544	650	912	1784	2934	5501
200	8	485	680	996	1500	3280	832	1250	1806	2177	4116	7215	11786
250	10	810	1140	1690	2560	5250	1105	1736	2638	3093	5910	11128	13222
300	12	1310	1870	2800	4290	7200	1502	2388	2929	4282	10137	16103	20075
350	14	1910	2740	4110	6320	9860	1946	3224	3971	7458	14141	24518	-
400	16	2860	4150	6300	9750	14500	3164	5139	6307	9310	18866	29630	-
450	18	4500	6500	8900	13500	16900	3793	6194	7609	14639	22400	34392	-
500	20	5860	7800	12000	18660	19000	4769	7826	9623	20011	28544	40918	-
550	22	-	-	-	-	-	5695	9454	11651	24785	42427	-	-
600	24	8920	13210	20380	31820	42500	7529	12958	15900	31226	43276	65351	-
650	26	-	-	-	-	-	8693	14394	17727	35184	47580	-	-
700	28	13320	19380	30670	48020	58000	9832	15620	20182	38987	52486	-	-
750	30	-	-	-	-	-	11172	18703	23086	41832	56210	-	-
800	32	24000	35420	55200	68830	82000	12494	21030	25985	45199	60849	-	-
850	34	-	-	-	-	-	21148	31558	33000	48401	65244	-	-
900	36	34960	52870	82700	134000	-	22987	34170	36045	52262	70355	-	-
1000	40	43420	66700	102820	162210	-	26059	39115	43990	60197	-	-	-
1050	42	-	-	-	-	-	28149	42414	50300	65496	-	-	-
1200	48	-	-	-	-	-	42776	71868	80302	118938	-	-	-
1350	54	-	-	-	-	-	70276	91238	116000	144342	-	-	-
1400	56	-	-	-	-	-	85654	108550	129900	169230	-	-	-
1500	60	-	-	-	-	-	116000	122820	178200	216270	-	-	-

Performance Specification

Technical Specification		PN(MPa)					Pressure Class						
		1.6	2.5	4.0	6.4	10.0	150	300	400	600	900	1500	2500
Test Pressure (Mpa)	Strength Test	2.4	3.75	6.0	9.6	15.0	2.94	7.67	10.20	15.30	22.98	38.30	63.83
	Seal Test	1.76	2.75	4.4	7.04	11.0	2.16	5.62	7.48	11.23	16.85	28.08	46.81
	Pressure Test	0.55±0.07											
Applicable Temperature		-196℃～550℃ (Different Raw Material for Different Work Temperature)											
Applicable Medium	Common Type	Water,Steam,Oil,Gas,Petrochemical and other comparable											
	Anti-Sulphur Type	Gas,Oil and other comparable which contains H_2S,CO											

CV chart of Trunnion Mounted Ball Valves

Flow coefficient is an index to measure the flow capacity of a valve. A higher value of flow coefficient means less pressure loss when fluid passing through the valve. The value of flow coefficient varies according to the dimensions, type and structure of valve. Valves of different types and specifications shall be tested separately to make sure of their values of flow coefficient. Regarding valves of the same structure, flow coefficient varies according to the flow direction of fluid through the valve. Generally, these differences are caused by different pressure recoveries.

The table below if the flow coefficient of fixed ball valve. 'Cv' stands for the American gallons flowing through the valve per minute under 1pound/inch²(0.006894757MPa) pressure drop++60° F(+16℃) water.

Size		2"FB	3"RB	3"FB	4"RB	4"FB	6"RB	6"FB	8"RB
		50	80×50	80	100×80	100	150×100	150	200×150
Pressure Class	150	500	180	1350	545	2500	790	5300	1945
	300	500	195	1350	535	2500	765	5300	1945
	600	500	180	1350	550	2500	745	5300	2220
	900	500	187	1350	512	2500	740	5300	2035
	1500	330	187	1350	510	2500	742	4167	2033
	2500	301	180	743	505	1460	735	2603	1502
Size		8"FB	10"RB	10"FB	12"RB	12"FB	14"RB	14"FB	16"RB
		200	250×200	250	300×250	300	350×300	350	400×300
Pressure Class	150	10500	4050	17500	6900	26300	13100	31850	14600
	300	10500	4040	17500	7100	26300	13200	30050	14580
	600	10500	4065	17500	7150	26300	14350	28400	14350
	900	10500	4061	17500	7136	26300	14290	26803	14313
	1500	8013	4051	13309	7117	17073	14180	24276	14247
	2500	5370	3198	8631	5767	12503	-	-	-
Size		16"FB	18"RB	18"FB	20"RB	20"FB	22"FB	24"RB	24"FB
		400	450×400	450	500×400	500	550	600×500	600
Pressure Class	150	43300	-	57300	27750	74500	89700	44700	112300
	300	41700	-	55370	28050	72300	85350	44650	109150
	600	38150	-	50950	29500	65600	77600	48900	98150
	900	36705	-	48703	29443	62504	-	48713	86252
	1500	33215	-	43402	29253	55931	-	-	-
Size		26"FB	28"FB	30"RB	30"FB	32"FB	34"FB	36"RB	36"FB
		550	700	750×600	750	800	850	900×750	900
Pressure Class	150	128300	151750	76000	179300	199750	225000	123000	258300
	300	123050	146050	75900	171200	187700	214900	121550	243500
	600	114050	136500	73850	158900	175000	196500	118300	226300
	900	102940	121201	71500	140093	159420	181137	103083	226033
Size		40"FB	42"FB	48"FB	54"FB	56"FB	60"FB	-	-
		1000	1050	1200	1350	1400	1500	-	-
Pressure Class	150	323000	343000	480500	-	-	-	-	-
	300	309000	340000	460300	-	-	-	-	-
	600	28500	309000	438500	-	-	-	-	-
	900	-	-		-	-	-	-	-

Product Line

Size		PN(MPa)					Pressure Class						
DN	NPS	1.6	2.5	4.0	6.3	10.0	150	300	400	600	900	1500	2500
50	2	●/△					●/△					☆/△	
65	2½	●/△					●/△					☆/△	
80×65	3×2	●/△					●/△					☆/△	
80	3	●/△					☆/△					☆/△	
100×80	4×3	●/△					●/△					☆/△	
100	4	●/△					●/△				☆/△		
125	5	●/△			●/☆/△	△	●/△		●/☆/△	△	-		
150×100	6×4	●/△					●/△				☆/△		
150	6	●/☆/△/★				☆/△/★	●/☆/△/★			☆/△/★	☆/△/★		
200×150	8×6	☆/△/★			●/☆/△/★		☆/△/★		●/☆/△/★		☆/△/★		
200	8	☆/△/★					☆/△/★						
250×200	10×8	☆/△/★					☆/△/★						
250	10	☆/△/★					☆/△/★						
300×250	12×10	☆/△/★					☆/△/★						
300	12	☆/△/★					☆/△/★						
350×300	14×12	☆/△/★					☆/△/★						
350	14	☆/△/★					☆/△/★						
400×300	16×12	☆/△/★					☆/△/★						
400	16	☆/△/★					☆/△/★						
450	18	☆/△/★					☆/△/★						
500×400	20×16	☆/△/★					☆/△/★						
500	20	☆/△/★					☆/△/★						
600×500	24×20	☆/△/★					☆/△/★						
600	24	☆/△/★					☆/△/★						☆/★
650	26	☆/△/★					☆/△/★					☆/★	-
700	28	☆/△/★					☆/△/★					☆/★	-
750×600	30×24	☆/△/★					☆/△/★						-
750	30	☆/△/★				☆/★	☆/△/★			☆/★			-
800	32	☆/△/★				☆/★	☆/△/★			☆/★			-
850	34	☆/★					☆/★						-
900×750	36×30	☆/△/★					☆/△/★				☆/★		-
900	36	☆/★					☆/★						-
1000	40	☆/★		-		☆/★	☆/★		-	☆/★		-	
1050	42	☆/★		-		☆/★	☆/★		-	☆/★		-	
1200	48	☆/★		-		☆/★	☆/★		-	☆/★		-	
1350	54	-		-		☆/★	-		-	☆/★		-	
1400	56	☆/★		-		☆/★	☆/★		-	☆/★		-	
1500	60	☆/★		-		☆/★	☆/★		-	☆/★		-	

Note: ●Stands for handle operated valves
△Stands for air operated valves
☆Stands for gearbox operated valves
★Stands for electrically operated valves
-Stands for no option of this
Those not covered in the table can be custom made to users' requirements.

Design Drawing of Cast Steel Valve

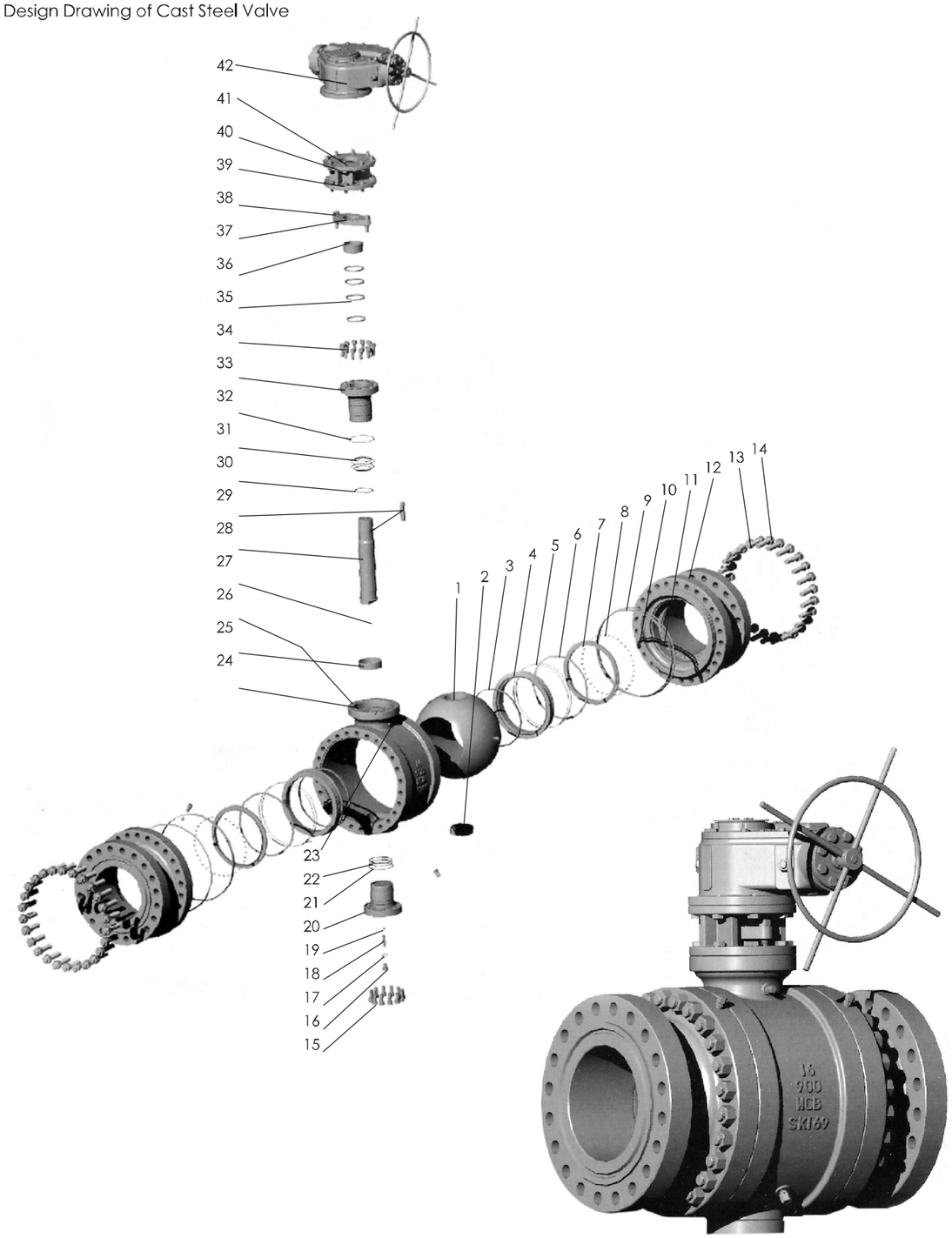

TIP VALVE CO.,LTD. Trunnion Ball Valve

The Material of Main Parts

No.	Parts Name	CarbonSteel Series	Stainless steel Series	Low Temperature Series	Anti-Sulphur	
					GB Standard	NACE Standard
1	Ball	A105+HCr/ENP	A351 CF8、CF8M、CF3、CF3M	A352 LCB、LCC+ENP	A105+HCr/ENP	A351 CF8M+ENP
2	Bush Bearing	Metal +PTFE,Braided Graphite Fibre				
3	Sealing Ring	NYLON、MOLON、DELRIN or PEEK				
4	Seat	A105+HCr/ENP	A182 F304、316	A182 F6a	A105+HCr/ENP	A182 F316
5	O Ring	VITON				
6	Fire Safe Gasket	Soft Graphite+ SS				
7	Supporting Ring	A105+HCr/ENP	A182 F304、316	A182 F6a	A105+HCr/ENP	A182 F316
8	Spring	INCONEL X-750				
9	O Ring	VITON				
10	Sealant Injection Valve	The same material with Body				
11	Gasket	Soft Graphite+ SS				
12	Bonnet	A216 WCB	A351 CF8、CF8M、CF3、CF3M	A352 LCB、LCC	A216 WCB	A351 CF8M
13	Stud	193 B7	A193 B8、B8M	A320 L7	A193 B7M	A193 B7M
14	Nut	A194 2H	A194 8M	A194 4	A194 2HM	A194 2HM
15	Nipple	A193 B7	A193 B8、B8M	A320 L7	A193 B7M	A193 B7M
16	Plug	A29 1025	SS	SS	A29 1025	SS
17	Gasket	Gasket	RPTFE	RPTFE	Pure Copper	RPTFE
18	Nipple	A193 B7	A193 B8、B8M	A320 L7	A193 B7M	A193 B7M
19	Ball	A105+HCr/ENP	A182 F304			
20	Bottom cover	A105+HCr/ENP	A182 F304、316	A29 4140+ENP	A105+A182 F316、HCr/ENP	
21	Gasket	Soft Graphite+ SS				
22	O Ring	VITON				
23	Sealant Injection Valve	The same material with Body				
24	Body	A216 WCB	A351、CF8、CF8M、CF3、CF3M	A352 LCB、LCC	GB/T12229、A216 WCB	A351 CF8M
25	Bush Bearing	Metal+PTFE,Braided Graphite Fibre				
26	Drainage Valves	The same material with Body				
27	Spring	A276 304				
28	Key	GB/T699 45				
29	Stem	A29 4140+ENP	A182 F304、316	A182 F6a	A182 F304	A182 F304
30	Thrust bearing	Metal+PTFE,Braided Graphite Fibre				
31	O Ring	VITON				
32	Gasket	Soft Graphite+ SS				
33	Cover	A105+HCr/ENP	A182 F304、316	A182 F6a	A105+HCr/ENP	A182 F316
34	Screw	A193 B7	A193 B8、B8M	A320 L7	A193 B7M	A193 B7M
35	Packing	Soft Graphite, PTFE				
36	Packing Gland	A182 F6a	A182 F304、316	A182 F304	A182 F6	A182 F316
37	Gland Flange	A216 WCB	A351 CF8、CF8M	A351 CF8	A216 WCB	A351 CF8M
38	Bolt	A193 B7	A193 B8、B8M	A320 L7	A193 B7M	A193 B7M
39	Bolt	A193 B7	A193 B8、B8M	A320 L7	A320 L7	A193 B7M
40	Yoke	A216 WCB	A351 CF8	A352 LCB	A216 WCB	A351 CF8
41	Bolt	A193 B7	A193 B8、B8M	A320 L7	A193 B7M	A193 B7M
42	Operation Type	Worm Gear,Electric Operation,Pneumatic Operation,Airdraulic Operation				

Valve Structural Drawing of Forged Steel

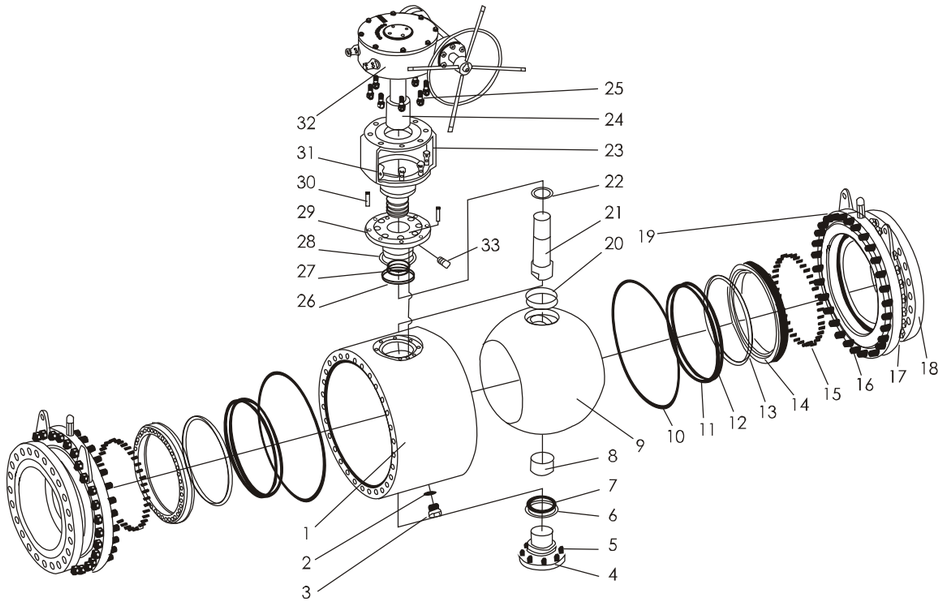

The Material of Main Parts

No.	Parts Name	Material		
		Carbon Steel	Stainless Steel	Low Temperature Steel
1	Body	ASTM A105	A182 F304	A350 LF2
2	Gasket	Soft Graphite+SS		
3	Drain Valve	A29 1025	A182 F304	SS
4	Bottom Cover	ASTM A105	A182 F304	A350 LF2
5	Stud	A193 B7	A193 B8	A320 L7
6	Gasket	Soft Graphite+SS		
7	O Ring	VITON		
8	Bottom Bush Bearing	PTFE+CS	PTFE+SS	PTFE+SS
9	Ball	ASTM A105+ENP	A182 F304	A182 F304
10	Middle Flange	Soft Graphite+SS		
11	Gasket O Ring	VITON		
12	Fire Safe Ring	Soft Graphite		
13	Sealing Ring	PTFE、NYLON、PEEK、MOLON、PCTFE		
14	Seat	ASTM A105+ENP	A182 F304	A182 F304
15	Spring	INCONEL X-750		
16	Stud	A193 B7	A193 B8	A320 L7
17	Nut	A194 2H	A194 8	A194 7

No.	Parts Name	Material		
		Carbon Steel	Stainless Steel	Low Temperature Steel
18	Bonnet	ASTM A105	A182 F304	A350 LF2
19	Sealant Injection Valve	A29 1025	SS	SS
20	Top Bush Bearing	PTFE+CS	PTFE+SS	PTFE+SS
21	Stem	A182 F6a	A182 F304	A182 F304
22	Flat Bush Bearing	PTFE+CS	PTFE+SS	PTFE+SS
23	Yoke	A216 WCB		
24	Connecting Ring	ANSI 1025		
25	Stud	A193 B7		
26	O Ring	VITON		
27	O Ring	VITON		
28	Gasket	Soft Graphite+SS		
29	Cover	ASTM A105	A182 F304	A350 LF2
30	Locating Pin	A182 F6a		
31	Stud	A193 B7		
32	Worm Gear	-		
33	Sealant Injection Valve	A29 1025	SS	SS

Notes: 1. Use different materials for the seal ring upon the temperature and pressure of the industrial and mineral media.
2. As of the materials, in addition to those listed in the table, others can be used upon the users' requirement.

The specification of Sealing Seat Material

Test Standard	Test Item	Unit	PEEK	NYLON	DEVLON	PPL	PTFE	PTFE+Graphite	PTFE+Glass Fiber	NYLON66
D638	Tensile Strength 23℃/-℃	MPa	93.08	75/100	79.92/109.52	72	24.82	25	24.2	60/80
D638	Elongation at Break 23℃	%	50	10/30	5.37	6/8	300	150	105	60
D785	Hardness	D	-	78	78/80	80	56	58	65	78
		R	120	110/120	114	-	-	-	-	118
D790	Bend Strength	MPa	166.71	140	121.55	176	-	-	23.7	117
D621	Deforming under pressure during 24hours	%	~0	1.2	1.0/2.0	0.78	14/28	8.8	5.5	1.4
E831	Linear Expansion Factor	1/K	0.48×10^{-4}	0.6×10^{-4}	1.1×10^{-4}	0.43×10^{-4}	1.2×10^{-4}	1×10^{-4}	1×10^{-4}	0.7×10^{-4}
D648	Heat Deforming Temperature 1.82MPa/0.46MPa	℃	160	150/190	93	163	55	63	78	90
			-	-	209	-	132	-	-	235
D792	Density	G/cm3	1.34~1.36	1.15	1.14	1.48	2.20	2.22	2.1	1.12
D570	24hours Absorption Rate	%	0.13	0.7	0.1	0.2	0.01	0.015	0.015	1.2
D695	Tensile Strength	MPa	142	140	140	117	35	45	52	-
D695	Yield Strength	MPa	-	120	88.9	-	11.7	-	-	75.8

Performance Data Sheet of Seat Sealing Materials

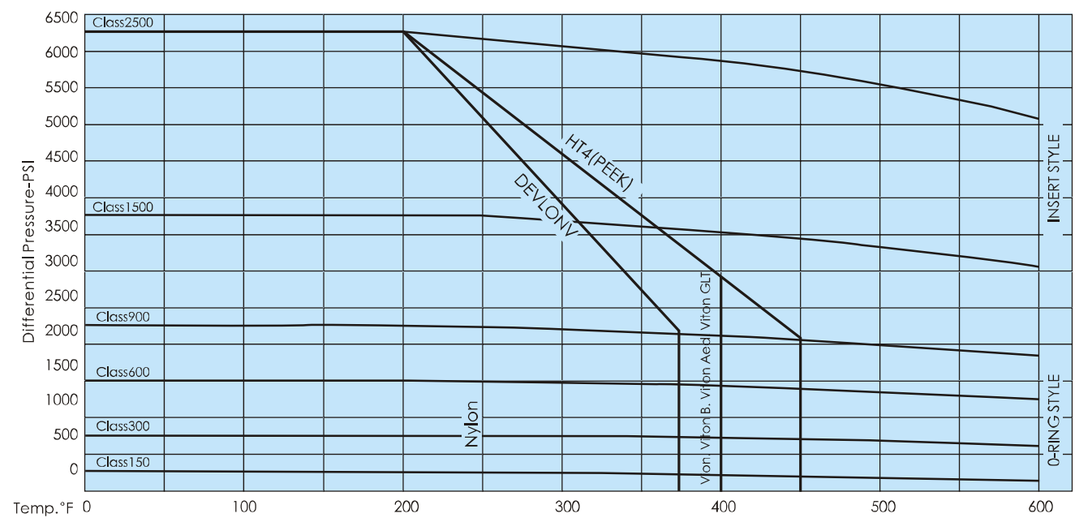

Above table gives the temperature and pressure ratings of nylon, devlonv, PEEK, viton and etc., and the temperature and pressure ratings of 150Lb, 300Lb and 600Lb equally apply to seat design with O-ring.

Matching List of Valve Actuation Drive

Size		PN1.6、150Lb		PN2.5/4.0、300Lb		PN6.4、400Lb		PN10.0、600Lb		PN15.0、900Lb		1500Lb		2500Lb	
DN	NPS	Penumatic	Eletric	Penumatic	Eletric	Penumatic	Eletric	Penumatic	Eletric	Penumatic	Eletric	Penumatic	Eletric	Penumatic	Eletric
50	2	AG09	-	AG19	-	AG19	-	AG19	-	AG19	-	AW13	-	AW13	-
65	21/2	AG13	-	AG13	-	AG13	-	AW13	-	AG13	-	AW13	-	AW17	-
80×50	3×2	AG09	-	AG13	-	AG13	-	AG13	-	AG09	-	AW13	-	AW13	-
80	3	AG13	-	AW13	-	AW13	-	AW13	-	AW13	-	AW17	-	AW20	-
100×80	4×3	AG13	-	AW13	-	AW13	-	AW13	-	AW13	-	AW17	-	AW20	-
100	4	AW13	-	AW13	-	AW13	-	AW13	-	AW17	-	AW20	-	AW20	-
125	5	AW13	-	AW17	-	AW17	-	AW17	-	-	-	-	-	AW28	-
150×100	6×4	AW13	-	AW13	-	AW13	-	AW13	-	AW17	-	AW20	-	AW20	-
150	6	AW17	SMC-04/H0BC	AW17	SMC-04/H0BC	AW17	SMC-04/H1BC	AW17	SMC-04/H1BC	AW20	SMC-03/H1BC	AW20	SMC-03/H2BC	C1-355	SMC-00/H3BC
200×150	8×6	AW17	SMC-04/H0BC	AW17	SMC-04/H0BC	AW17	SMC-04/H0BC	AW17	SMC-04/H1BC	AW20	SMC-03/H1BC	AW20	SMC-03/H2BC	AW28	SMC-00/H3BC
200	8	AW17	SMC-04/H0BC	AW17	SMC-04/H1BC	AW20	SMC-04/H1BC	AW20	SMC-03/H1BC	AW20	SMC-03/H2BC	AW28	SMC-00/H3BC	C1-355	SMC-0/H4BC
250×200	10×8	AW17	SMC-04/H0BC	AW17	SMC-04/H1BC	AW20	SMC-04/H1BC	AW17	SMC-03/H1BC	AW20	SMC-03/H2BC	AW28	SMC-00/H3BC	C1-355	SMC-0/H4BC
250	10	AW17	SMC-04/H0BC	AW20	SMC-04/H1BC	AW20	SMC-03/H2BC	AW20	SMC-03/H2BC	AW28	SMC-00/H3BC	C1-355	SMC-0/H4BC	C2-490	SMC-0/H4BC
300×250	12×10	AW17	SMC-04/H0BC	AW20	SMC-04/H1BC	AW20	SMC-04/H1BC	AW20	SMC-03/H2BC	AW28	SMC-00/H3BC	C1-355	SMC-0/H4BC	C1-355	SMC-0/H4BC
300	12	AW20	SMC-04/H0BC	AW20	SMC-03/H2BC	AW28	SMC-03/H2BC	AW28	SMC-00/H3BC	C1-355	SMC-0/H4BC	C1-355	SMC-0/H4BC	C1-355	SMC-1/H5BC
350×300	14×12	AW20	SMC-04/H0BC	AW20	SMC-04/H1BC	AW28	SMC-04/H1BC	AW20	SMC-00/H3BC	C1-355	SMC-0/H4BC	C1-355	SMC-0/H4BC	C2-490	SMC-1/H5BC
350	14	AW20	SMC-03/H1BC	AW28	SMC-00/H3BC	AW28	SMC-00/H3BC	C1-355	SMC-00/H3BC	C1-355	SMC-0/H4BC	C2-490	SMC-1/H5BC	C2-490	SMC-2/H6BC
400×350	16×14	AW20	SMC-04/H1BC	AW20	SMC-04/H1BC	AW28	SMC-04/H1BC	AW20	SMC-00/H3BC	C1-355	SMC-0/H4BC	C1-355	SMC-0/H4BC	C2-490	SMC-1/H5BC
400	16	AW28	SMC-03/H2BC	AW28	SMC-00/H3BC	C1-355	SMC-00/H3BC	C1-355	SMC-0/H4BC	C2-490	SMC-1/H5BC	C2-490	SMC-2/H6BC	C3-600	SMC-2/H6BC
450×400	18×16	AW28	SMC-03/H2BC	AW28	SMC-00/H3BC	C1-355	SMC-00/H3BC	C1-355	SMC-0/H4BC	C2-490	SMC-1/H5BC	C2-490	SMC-2/H6BC	C2-490	SMC-2/H6BC
450	18	AW28	SMC-00/H3BC	C1-355	SMC-00/H3BC	C1-355	SMC-00/H3BC	C2-490	SMC-0/H4BC	C2-490	SMC-1/H5BC	C2-490	SMC-2/H6BC	C3-600	SMC-3/H6BC
500×450	20×18	AW28	SMC-03/H2BC	AW28	SMC-00/H3BC	C1-355	SMC-00/H3BC	C1-355	SMC-0/H4BC	C2-490	SMC-1/H5BC	C2-490	SMC-2/H6BC	C2-490	SMC-2/H6BC
500	20	AW28	SMC-00/H3BC	C1-355	SMC-0/H4BC	C1-355	SMC-0/H4BC	C2-490	SMC-1/H5BC	C2-490	SMC-2/H6BC	C3-600	SMC-3/H6BC	-	SMC-3/H6BC
600×500	24×20	AW28	SMC-00/H3BC	C1-355	SMC-0/H4BC	C1-355	SMC-0/H4BC	C2-490	SMC-1/H5BC	C2-490	SMC-2/H6BC	C3-600	SMC-3/H6BC	C3-600	SMC-3/H6BC
600	24	C1-355	SMC-0/H4BC	C2-490	SMC-0/H4BC	C2-490	SMC-1/H5BC	C2-490	SMC-2/H6BC	C3-600	SMC-3/H6BC	C3-600	SMC-3/H6BC	-	SMC-3/H7BC
650	26	C1-355	SMC-0/H4BC	C2-490	SMC-1/H5BC	C2-490	SMC-1/H5BC	C3-600	SMC-2/H6BC	C3-600	SMC-3/H6BC	-	SMC-3/H7BC	-	-
700	28	C2-490	SMC-1/H5BC	C2-490	SMC-1/H5BC	C2-490	SMC-1/H5BC	C3-600	SMC-2/H6BC	C3-600	SMC-3/H6BC	-	SMC-3/H7BC	-	-
750×600	30×20	C1-355	SMC-0/H4BC	C1-490	SMC-0/H4BC	C2-490	SMC-0/H4BC	C2-490	SMC-2/H6BC	C3-600	SMC-3/H6BC	C3-600	SMC-3/H6BC	-	-
750	30	C2-490	SMC-1/H5BC	C3-600	SMC-1/H5BC	C3-600	SMC-1/H5BC	-	SMC-3/H6BC	-	SMC-3/H6BC	-	SMC-3/H10BC	-	-
800	32	C3-600	SMC-2/H6BC	C3-600	SMC-2/H6BC	C3-600	SMC-2/H6BC	-	SMC-3/H6BC	-	SMC-3/H6BC	-	SMC-3/H10BC	-	-
850	34	-	SMC-2/H6BC	-	SMC-2/H6BC	-	SMC-2/H6BC	-	SMC-3/H6BC	-	SMC-3/H7BC	-	SMC-3/H12BC	-	-
900×750	36×30	C2-490	SMC-1/H5BC	C1-600	SMC-1/H5BC	C3-600	SMC-1/H5BC	C3 -600	SMC-3/H6BC	-	SMC-3/H7BC	-	SMC-3/H10BC	-	-
900	36	-	SMC-2/H6BC	-	SMC-3/H6BC	-	SMC-3/H6BC	-	SMC-3/H6BC	-	SMC-3/H6BC	-	SMC-3/H12BC	-	-
1000	40	-	SMC-2/H6BC	-	SMC-3/H6BC	-	-	-	SMC-3/H6BC	-	-	-	-	-	-
1050	42	-	SMC-3/H6BC	-	SMC-3/H6BC	-	-	-	SMC-3/H7BC	-	-	-	-	-	-
1200	48	-	SMC-3/H6BC	-	SMC-3/H7BC	-	-	-	SMC-3/H7BC	-	-	-	-	-	-
1350	54	-	SMC-3/H6BC	-	SMC-3/H7BC	-	-	-	-	-	-	-	-	-	-
1400	56	-	SMC-3/H7BC	-	SMC-3/H7BC	-	-	-	SMC-3/H10BC	-	-	-	-	-	-
1500	60	-	SMC-3/H7BC	-	SMC-3/H10BC	-	-	-	SMC-3/H10BC	-	-	-	-	-	-

Notes: 1. Output torques are subject to manufacturer's manual
2. Manufacturer of Pneumatic actuator: Alpha Corporation Manufacturer of Electric actuator: Tianjin Ertong

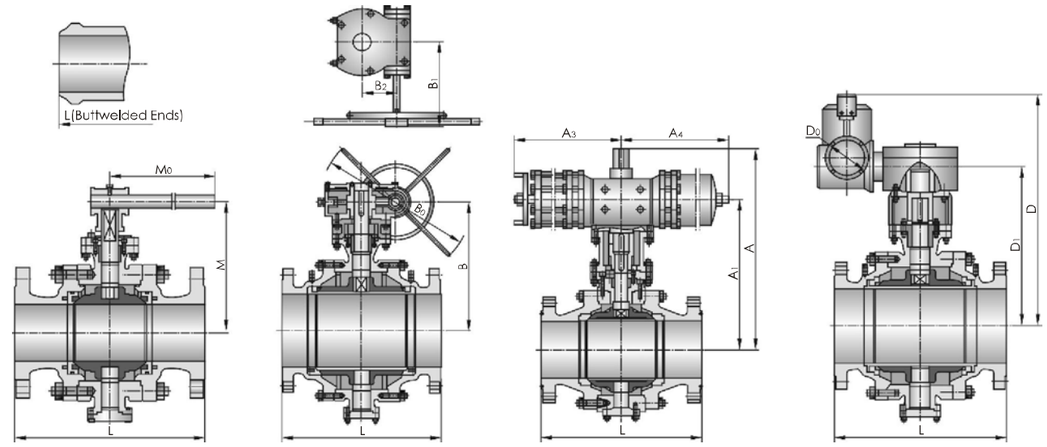

Lever Operated Worm Gear Operated Penumatic Operated Eletric Operated

Main Outline Dimensions

PN1.6MPa Class150

mm

DN (mm)	NPS (in)	L			d	Handwheel		Worm Gear/Lever				Penumatic				Eletric			Weight(kg)	
		RF	BW	RTJ		M	M0	B	B0	B1	B2	A	A1	A3	A4	D	D1	D0	RF	BW
50	2	178	216	191	49	107	230	-	-	-	-	217	174	89	181	-	-	-	12	11
65	21/2	191	241	203	62	125	400	-	-	-	-	308	248	148	257	-	-	-	16	15.3
80	3	203	283	216	74	152	400	-	-	-	-	318	258	148	257	-	-	-	22	21.3
100	4	229	305	241	100	178	650	-	-	-	-	407	322	287	287	-	-	-	35	34
125	5	356	381	-	125	252	1050	-	-	-	-	480	395	287	287	-	-	-	58	55.4
150	6	394	457	406	150	272	1050	378	400	200	106	562	457	378	378	554	337	508	74	72
200	8	457	521	470	201	-	-	421	400	200	108	700	595	378	378	606	421	508	205	201
250	10	533	559	546	252	-	-	482	400	200	108	735	630	378	378	667	482	508	322	310
300	12	610	635	622	303	-	-	549	600	330	144	858	728	530	530	734	549	508	460	447
350	14	686	762	699	334	-	-	582	600	330	144	1013	883	530	530	784	582	508	576	536
400	16	762	838	775	385	-	-	687	800	370	220	1319	1154	680	680	889	687	508	864	814
450	18	864	914	876	436	-	-	730	800	370	220	1389	1224	680	680	981	730	305	1280	1210
500	20	914	991	927	487	-	-	772	800	370	220	1459	1294	680	680	1023	772	305	1600	1500
600	24	1067	1143	1080	589	-	-	995	800	515	279	1060	915	1455	1455	1268	995	305	3540	3000
650	26	1143	1245	-	633	-	-	1022	800	515	279	1234	1089	1455	1455	1334	1071	305	3930	3240
700	28	1245	1346	-	684	-	-	1088	800	515	279	1140	980	1665	1665	1459	1155	305	4500	3710
750	30	1295	1397	-	735	-	-	1153	800	515	279	1195	1035	1665	1665	1515	1211	305	5370	4530
800	32	1372	1524	-	779	-	-	1223	800	570	368	1338	1149	1960	1960	1649	1316	458	5940	4870
850	34	1473	1626	-	830	-	-	1307	800	570	368	-	-	-	-	1694	1361	458	6615	5305
900	36	1524	1727	-	874	-	-	1374	800	570	368	-	-	-	-	1766	1433	458	7540	6010
1000	40	1753	1956	-	976	-	-	1468	960	575	220	-	-	-	-	1854	1521	458	9320	7400
1050	42	1855	2083	-	1020	-	-	1532	960	575	220	-	-	-	-	2036	1586	610	14450	12150
1200	48	2134	2388	-	1166	-	-	1670	960	575	220	-	-	-	-	2185	1735	610	19200	16000
1350	54	-	-	-	1312	-	-	1858	960	575	220	-	-	-	-	2330	1880	610	-	-
1400	56	2388	2388	-	1360	-	-	1920	960	630	295	-	-	-	-	2395	1945	610	29400	24500
1500	60	2540	2540	-	1458	-	-	2070	960	630	295	-	-	-	-	2504	2054	610	36000	30000

Note: Under "L" Bar in the chart, RF stands for RF (Raised Flange) structural length; BW stands for BW (Buttwelded Ends) structural length; RTJ stands for RTJ (Ring Joint) structural length.

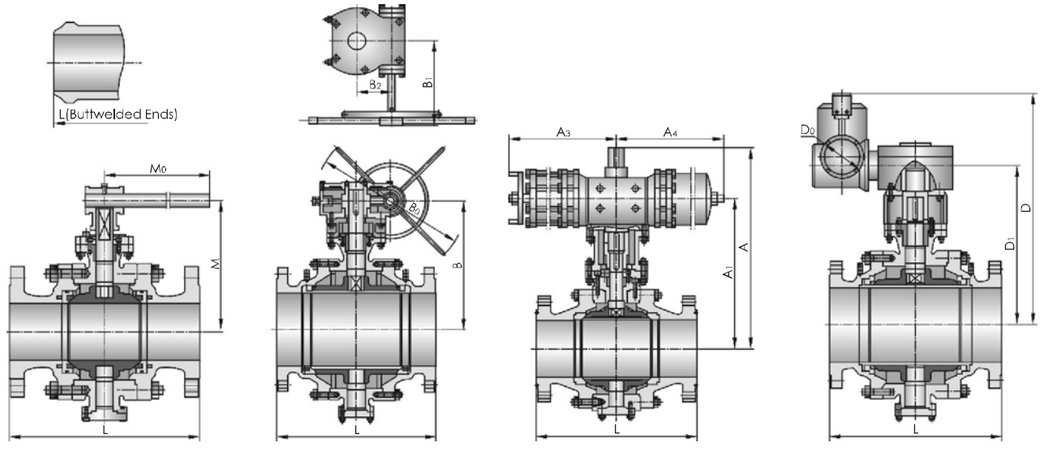

Lever Operated | Worm Gear Operated | Penumatic Operated | Eletric Operated

Main Outline Dimensions

PN2.5/4.0MPa Class300

mm

DN (mm)	NPS (in)	L			d	Handwheel		Worm Gear/Lever				Penumatic				Eletric			Weight(kg)	
		RF	BW	RTJ		M	M_0	B	B_0	B_1	B_2	A	A_1	A_3	A_4	D	D_1	D_0	RF	BW
50	2	216	216	232	49	107	230	-	-	-	-	234	174	148	257	-	-	-	15	11
65	2 1/2	241	241	257	62	125	400	-	-	-	-	308	248	148	257	-	-	-	24	18
80	3	283	283	298	74	152	400	-	-	-	-	343	258	287	287	-	-	-	30	22
100	4	305	305	321	100	178	650	-	-	-	-	407	322	287	287	-	-	-	55	45
125	5	381	381	-	125	252	1050	-	-	-	-	500	395	378	378	-	-	-	87	69
150	6	403	403	419	150	272	1050	378	400	200	106	562	457	378	378	522	337	508	118	98
200	8	502	521	518	201	-	-	421	400	200	108	700	595	378	378	606	421	508	255	225
250	10	568	559	584	252	-	-	482	600	330	144	760	630	530	530	667	482	508	370	330
300	12	648	635	664	303	-	-	549	600	330	144	858	728	530	530	751	549	508	533	493
350	14	762	762	778	334	-	-	582	800	370	220	1048	883	680	680	784	582	305	640	600
400	16	838	838	854	385	-	-	687	800	370	220	1319	1154	680	680	938	687	305	1030	930
450	18	914	914	930	436	-	-	730	800	370	220	1369	1224	1455	1455	981	730	305	1542	1402
500	20	991	991	1010	487	-	-	772	800	515	279	1459	1294	1455	1455	1045	772	305	2100	1900
600	24	1143	1143	1165	589	-	-	995	800	515	279	1075	915	1665	1665	1268	995	305	3430	2860
650	26	1245	1245	1270	633	-	-	1022	800	515	279	1249	1089	1665	1665	1375	1071	305	4340	3620
700	28	1346	1346	1372	684	-	-	1088	800	515	279	1140	980	1665	1665	1459	1155	305	4960	4140
750	30	1397	1397	1422	735	-	-	1153	800	570	368	1195	1035	1960	1960	1515	1211	305	5950	4960
800	32	1524	1524	1553	779	-	-	1223	800	570	368	1338	1149	1960	1960	1649	1316	458	6760	5640
850	34	1626	1626	1654	830	-	-	1307	800	570	368	-	-	-	-	1694	1361	458	8280	6900
900	36	1727	1727	1756	874	-	-	1374	960	575	220	-	-	-	-	1883	1433	458	9640	8040
1000	40	1930	1930	-	976	-	-	1468	960	575	220	-	-	-	-	1971	1521	458	11730	9680
1050	42	2032	2032	-	1020	-	-	1532	960	630	295	-	-	-	-	2036	1586	610	16300	13700
1200	48	2388	2388	-	1166	-	-	1670	960	630	295	-	-	-	-	2255	1735	610	20160	16800
1350	54	-	-	-	1312	-	-	1858	960	630	295	-	-	-	-	2400	1880	610	-	-
1400	56	2642	2642	-	1360	-	-	1920	960	630	295	-	-	-	-	2465	1945	610	30860	25720
1500	60	2946	2946	-	1458	-	-	2070	960	630	295	-	-	-	-	2574	2054	610	37800	31500

Note: Under "L" Bar in the chart, RF stands for RF (Raised Flange) structural length; BW stands for BW (Buttwelded Ends) structural length; RTJ stands for RTJ (Ring Joint) structural length.

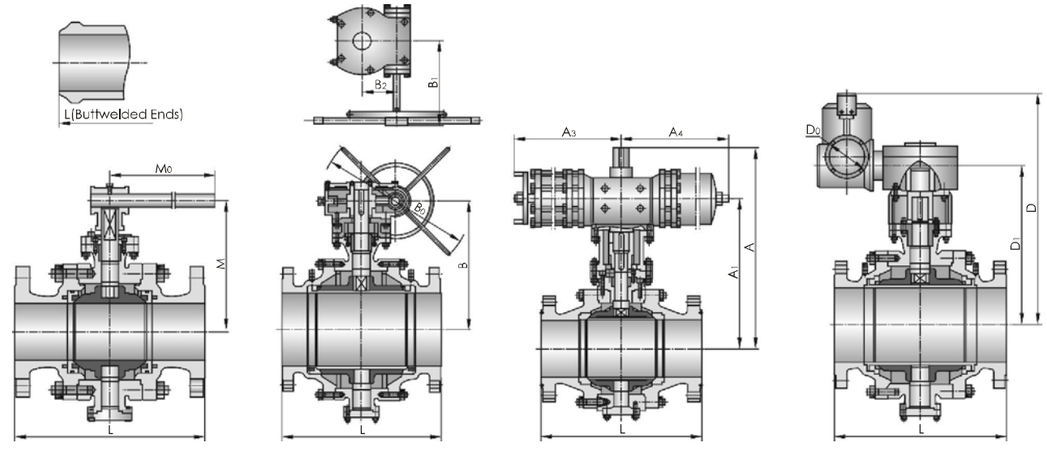

Lever Operated | Worm Gear Operated | Penumatic Operated | Eletric Operated

Main Outline Dimensions

PN6.4MPa Class400

mm

DN (mm)	NPS (in)	L			d	Handwheel		Worm Gear/Lever				Penumatic				Eletric			Weight(kg)	
		RF	BW	RTJ		M	M_0	B	B_0	B_1	B_2	A	A_1	A_3	A_4	D	D_1	D_0	RF	BW
50	2	292	292	295	49	107	400	-	-	-	-	234	174	148	257	-	-	-	23	19
65	2 1/2	330	330	333	62	142	400	-	-	-	-	308	248	148	257	-	-	-	35	27
80	3	356	356	359	74	152	650	-	-	-	-	343	258	287	287	-	-	-	49	39
100	4	406	406	410	100	178	650	-	-	-	-	407	322	287	287	-	-	-	91	71
125	5	457	457	-	125	252	1050	303	400	200	108	500	395	378	378	-	-	-	127	87
150	6	495	495	498	150	272	1050	383	400	200	108	562	457	378	378	522	337	508	192	152
200	8	597	597	600	201	-	-	447	600	330	144	725	595	530	530	606	421	508	355	285
250	10	673	673	676	252	-	-	480	600	330	144	760	630	530	530	684	482	508	640	530
300	12	762	762	765	303	-	-	517	800	370	220	943	728	680	680	751	549	508	880	730
350	14	826	826	829	334	-	-	588	800	370	220	1048	883	680	680	784	582	305	1100	910
400	16	902	902	905	385	-	-	639	800	370	220	1299	1154	1455	1455	938	687	305	1540	1310
450	18	978	978	981	436	-	-	710	800	515	279	1369	1224	1455	1455	981	730	305	1960	1640
500	20	1054	1054	1060	487	-	-	744	800	515	279	1459	1294	1455	1455	1045	772	305	2800	2210
600	24	1232	1232	1241	589	-	-	869	800	515	279	1075	915	1665	1665	1299	995	305	3930	3280
650	26	1308	1308	1321	633	-	-	908	800	515	279	1249	1089	1665	1665	1375	1071	305	4990	4160
700	28	1397	1397	1410	684	-	-	974	800	570	368	1140	980	1665	1665	1459	1155	305	5700	4760
750	30	1524	1524	1537	735	-	-	1013	800	570	368	1195	1035	1960	1960	1515	1211	305	6840	5700
800	32	1651	1651	1667	779	-	-	1079	800	570	368	1338	1149	1960	1960	1649	1316	458	7770	6480
850	34	1778	1778	1794	830	-	-	1164	960	575	220	-	-	-	-	1694	1361	458	9510	7930
900	36	1880	1880	1895	874	-	-	1201	960	575	220	-	-	-	-	1883	1433	458	11080	9240
1000	40	-	-	-	976	-	-	-	-	-	-	-	-	-	-	-	-	-	-	-
1050	42	-	-	-	1020	-	-	-	-	-	-	-	-	-	-	-	-	-	-	-
1200	48	-	-	-	1166	-	-	-	-	-	-	-	-	-	-	-	-	-	-	-
1350	54	-	-	-	1312	-	-	-	-	-	-	-	-	-	-	-	-	-	-	-
1400	56	-	-	-	1360	-	-	-	-	-	-	-	-	-	-	-	-	-	-	-
1500	60	-	-	-	1458	-	-	-	-	-	-	-	-	-	-	-	-	-	-	-

Note: Under "L" Bar in the chart, RF stands for RF (Raised Flange) structural length; BW stands for BW (Buttwelded Ends) structural length; RTJ stands for RTJ (Ring Joint) structural length.

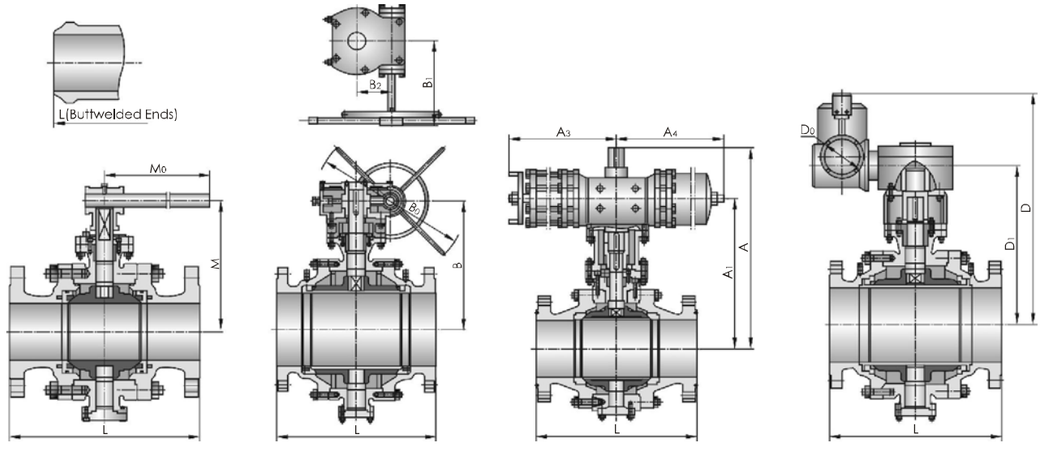

Lever Operated | Worm Gear Operated | Penumatic Operated | Eletric Operated

Main Outline Dimensions

PN10.0MPa Class600

mm

DN (mm)	NPS (in)	L			d	Handwheel		Worm Gear/Lever				Penumatic				Eletric			Weight(kg)	
		RF	BW	RTJ		M	M_0	B	B_0	B_1	B_2	A	A_1	A_3	A_4	D	D_1	D_0	RF	BW
50	2	292	292	295	49	107	400	-	-	-	-	234	174	148	257	-	-	-	35	29
65	2 1/2	330	330	333	62	125	650	-	-	-	-	333	248	287	287	-	-	-	38	31
80	3	356	356	359	74	152	650	-	-	-	-	343	258	287	287	-	-	-	55	45
100	4	432	432	435	100	178	1050	-	-	-	-	407	322	287	287	-	-	-	102	78
125	5	508	508	-	125	-	-	-	-	-	-	500	395	378	378	-	-	-	160	120
150	6	559	559	562	150	-	-	389	400	200	108	562	457	378	378	522	337	508	232	182
200	8	660	660	664	201	-	-	449	600	330	144	725	595	530	530	606	421	508	390	310
250	10	787	787	791	252	-	-	497	600	330	144	760	630	530	530	684	482	508	710	590
300	12	838	838	841	303	-	-	550	800	370	220	893	728	680	680	751	549	508	960	790
350	14	889	889	892	334	-	-	582	800	370	220	1048	883	1455	1455	784	582	305	1700	1490
400	16	991	991	994	385	-	-	687	800	370	220	1319	1154	1455	1455	960	687	305	1970	1720
450	18	1092	1092	1095	436	-	-	730	800	515	279	1384	1224	1665	1665	1003	730	305	2180	1830
500	20	1194	1194	1200	487	-	-	780	800	515	279	1459	1294	1665	1665	1045	772	305	3250	2770
600	24	1397	1397	1407	589	-	-	995	800	515	279	1075	915	1665	1665	1328	995	305	4880	4030
650	26	1448	1448	1461	633	-	-	1038	800	515	279	1249	1089	1960	1960	1375	1071	305	5830	4840
700	28	1549	1549	1562	684	-	-	1088	800	570	368	1140	980	1960	1960	1459	1155	305	6700	5610
750	30	1651	1651	1664	735	-	-	1157	800	570	368	-	-	-	-	1661	1211	305	7450	6210
800	32	1778	1778	1794	779	-	-	1190	800	570	368	-	-	-	-	1766	1316	458	8470	7060
850	34	1930	1930	1946	830	-	-	1246	960	575	220	-	-	-	-	1794	1361	458	10360	8640
900	36	2083	2083	2099	874	-	-	1292	960	575	220	-	-	-	-	1883	1433	458	12080	10070
1000	40	2337	2337	-	976	-	-	1361	960	575	220	-	-	-	-	1971	1521	458	15420	12850
1050	42	2387	2387	-	1020	-	-	1423	960	575	220	-	-	-	-	2036	1586	610	18180	15150
1200	48	2540	2540	-	1166	-	-	1568	960	630	295	-	-	-	-	2255	1735	610	25260	21050
1350	54	-	-	-	1312	-	-	1680	960	630	295	-	-	-	-	2400	1880	610	-	-
1400	56	2667	2667	-	1360	-	-	1730	960	630	295	-	-	-	-	2465	1945	610	38670	32230
1500	60	2950	2950	-	1458	-	-	1866	960	630	295	-	-	-	-	2574	2054	610	47360	39470

Note: Under "L" Bar in the chart, RF stands for RF (Raised Flange) structural length; BW stands for BW (Buttwelded Ends) structural length; RTJ stands for RTJ (Ring Joint) structural length.

TIP VALVE CO.,LTD.
Full Bore Trunnion Ball Valve

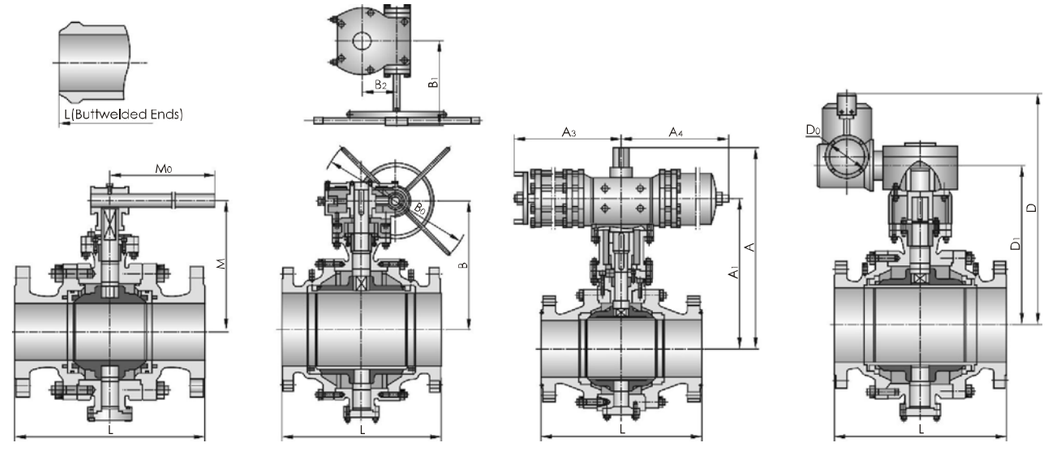

Lever Operated | Worm Gear Operated | Penumatic Operated | Eletric Operated

Main Outline Dimensions

PN15.0MPa Class900

mm

DN (mm)	NPS (in)	L			d	Handwheel		Worm Gear/Lever				Penumatic				Eletric			Weight(kg)	
		RF	BW	RTJ		M	M_0	B	B_0	B_1	B_2	A	A_1	A_3	A_4	D	D_1	D_0	RF	BW
50	2	368	368	371	49	123	650	-	-	-	-	234	174	148	257	-	-	-	50	40
65	2 1/2	419	419	422	62	136	800	-	-	-	-	308	248	148	257	-	-	-	75	60
80	3	381	381	384	74	-	-	185	400	200	106	343	258	287	287	-	-	-	92	70
100	4	457	457	460	100	-	-	225	400	200	108	427	322	378	378	-	-	-	146	109
125	5	-	-	-	-	-	-	-	-	-	-	-	-	-	-	-	-	-	-	-
150	6	610	610	613	150	-	-	389	600	330	144	587	457	530	530	522	337	508	339	264
200	8	737	737	740	201	-	-	449	600	330	144	725	595	530	530	606	421	508	640	540
250	10	838	838	841	252	-	-	497	800	370	220	795	630	680	680	684	482	508	960	800
300	12	965	965	968	303	-	-	550	800	370	220	837	728	1455	1455	822	549	508	1330	1110
350	14	1029	1029	1038	322	-	-	582	800	370	220	1048	883	1455	1455	855	582	305	1640	1370
400	16	1130	1130	1140	373	-	-	687	800	515	279	1314	1154	1665	1665	991	687	305	2240	1910
450	18	1219	1219	1232	423	-	-	730	800	515	279	1384	1224	1665	1665	1003	730	305	2770	2310
500	20	1321	1321	1334	471	-	-	780	800	515	279	1459	1294	1665	1665	1105	772	305	3740	3120
600	24	1549	1549	1568	570	-	-	995	800	515	279	1075	915	1960	1960	1445	995	305	5560	4640
650	26	1651	1651	1674	617	-	-	1038	800	570	368	1249	1089	1960	1960	1521	1071	305	7070	5880
700	28	1753	1753	1775	665	-	-	1088	800	570	368	1140	980	1960	1960	1605	1155	305	8070	6730
750	30	1880	1880	1902	712	-	-	1157	800	570	368	-	-	-	-	1661	1211	305	9680	8070
800	32	2032	2032	2054	760	-	-	1190	960	575	220	-	-	-	-	1766	1316	458	11000	9170
850	34	2159	2159	2188	808	-	-	1246	960	575	220	-	-	-	-	1881	1361	458	13470	11230
900	36	2286	2286	2315	855	-	-	1292	960	575	220	-	-	-	-	1953	1433	458	15700	13090
1000	40	2410	2410	2438	959	-	-	1361	960	630	295	-	-	-	-	1971	1521	458	20040	16700
1050	42	2515	2515	2540	1003	-	-	1423	960	630	295	-	-	-	-	2036	1586	610	23620	19690
1200	48	2620	2620	-	1155	-	-	1568	960	630	295	-	-	-	-	2255	1735	610	32830	27360
1350	54	-	-	-	-	-	-	1680	960	630	295	-	-	-	-	2400	1880	610	-	-
1400	56	2820	2820	-	1337	-	-	1730	960	630	295	-	-	-	-	2465	1945	610	44086	28981
1500	60	2930	2930	-	1438	-	-	1866	960	630	295	-	-	-	-	2574	2054	610	55210	46308

Note: Under "L" Bar in the chart, RF stands for RF (Raised Flange) structural length; BW stands for BW (Buttwelded Ends) structural length; RTJ stands for RTJ (Ring Joint) structural length.

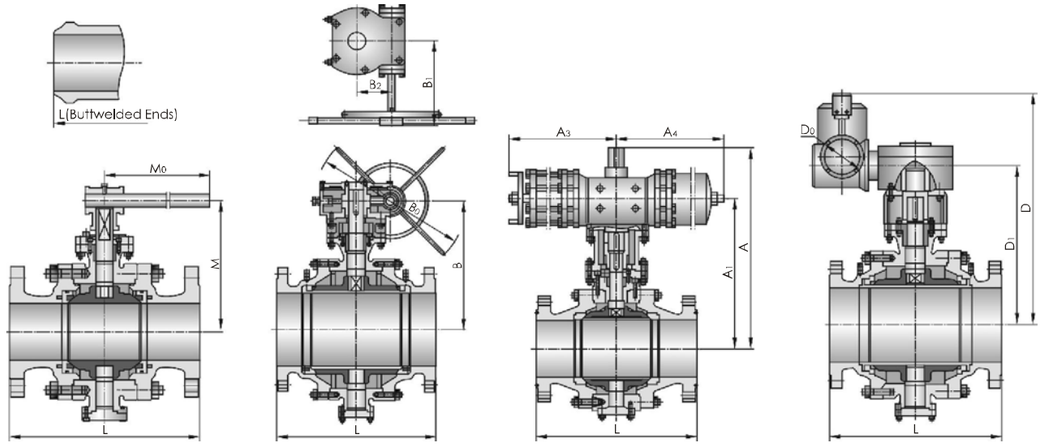

Lever Operated | Worm Gear Operated | Penumatic Operated | Eletric Operated

Main Outline Dimensions

Class1500

mm

DN (mm)	NPS (in)	L			d	Worm Gear/Lever				Penumatic				Eletric			Weight(kg)	
		RF	BW	RTJ		B	B_0	B_1	B_2	A	A_1	A_3	A_4	D	D_1	D_0	RF	BW
50	2	368	368	371	49	154	400	200	106	259	174	287	287	-	-	-	50	40
65	2 1/2	419	419	422	62	169	400	200	108	333	248	287	287	-	-	-	75	60
80	3	470	470	473	74	187	600	330	144	363	258	378	378	-	-	-	117	82
100	4	546	546	549	100	217	600	330	144	452	322	530	530	-	-	-	216	150
125	5	-	-	-	-	-	-	-	-	-	-	-	-	-	-	-	-	-
150	6	705	705	711	144	346	800	370	220	587	457	530	530	522	337	508	532	414
200	8	832	832	841	192	384	800	370	220	760	595	680	680	623	421	508	870	677
250	10	991	991	1000	239	452	800	370	220	739	630	1455	1455	755	482	508	1467	1132
300	12	1130	1130	1146	287	512	800	515	279	837	728	1455	1455	822	549	508	2270	1777
350	14	1257	1257	1276	315	561	800	515	279	1043	883	1665	1665	886	582	508	3240	2589
400	16	1384	1384	1407	360	601	800	515	279	1314	1154	1665	1665	1020	687	508	4645	3782
450	18	1537	1537	1559	371	688	800	515	279	1384	1224	1665	1665	1003	730	305	6035	4812
500	20	1664	1664	1686	416	727	800	570	368	1459	1294	1960	1960	1272	772	305	8077	6555
600	24	1943	1943	1972	498	803	800	570	368	1075-	915	1960	1960	1445	995	305	12357	9900
650	26	2048	2048	2077	540	853	800	570	368	-	-	-	-	1521	1071	305	14179	11409
700	28	2148	2148	2176	584	938	960	575	220	-	-	-	-	1605	1155	305	16314	12422
750	30	2251	2251	2281	625	1070	960	575	220	-	-	-	-	1661	1211	305	19466	14586
800	32	2346	2346	2380	670	1200	960	575	220	-	-	-	-	1766	1316	458	25728	19993
850	34	2450	2450	2454	720	1310	960	630	295	-	-	-	-	1881	1361	458	31416	24766
900	36	2556	2556	2590	762	1430	960	630	295	-	-	-	-	1953	1433	458	38328	30478

Class2500

mm

DN (mm)	NPS (in)	L			d	Worm Gear/Lever				Penumatic				Eletric			Weight(kg)	
		RF	BW	RTJ		B	B_0	B_1	B_2	A	A_1	A_3	A_4	D	D_1	D_0	RF	BW
50	2	451	451	454	42	174	600	330	144	259	174	287	287	-	-	-	93	70
65	2 1/2	508	508	540	52	198	600	330	144	353	248	378	378	-	-	-	152	-
80	3	578	578	584	62	224	800	370	220	388	258	530	530	-	-	-	215	162
100	4	673	673	683	87	268	800	370	220	452	322	530	530	-	-	-	385	322
150	6	914	914	927	131	371	800	370	220	622	457	680	680	539	337	508	830	755
200	8	1022	1022	1038	179	420	800	515	279	704	595	1455	1455	694	421	508	1435	1105
250	10	1270	1270	1292	223	540	800	515	279	739	630	1455	1455	755	482	508	2220	1720
300	12	1422	1422	1445	265	638	800	515	279	888	728	1665	1665	853	549	305	3050	2370
350	14	1540	1540	1569	241	663	800	515	279	992	883	1455	1455	886	582	305	3350	2610
400	16	1567	1567	1596	276	764	800	570	368	1314	1154	1665	1665	1020	687	305	5375	4397
450	18	1825	1825	1854	311	847	800	570	368	1384	1224	1960	1960	1003	730	305	5800	4870
500	20	1875	1875	1904	343	867	800	570	368	1459	1294	1960	1960	1272	772	305	8612	7035
600	24	2257	2257	2286	413	1060	960	575	220	-	-	-	-	1445	995	305	12747	10875

Note: Under "L" Bar in the chart, RF stands for RF (Raised Flange) structural length; BW stands for BW (Buttwelded Ends) structural length; RTJ stands for RTJ (Ring Joint) structural length.

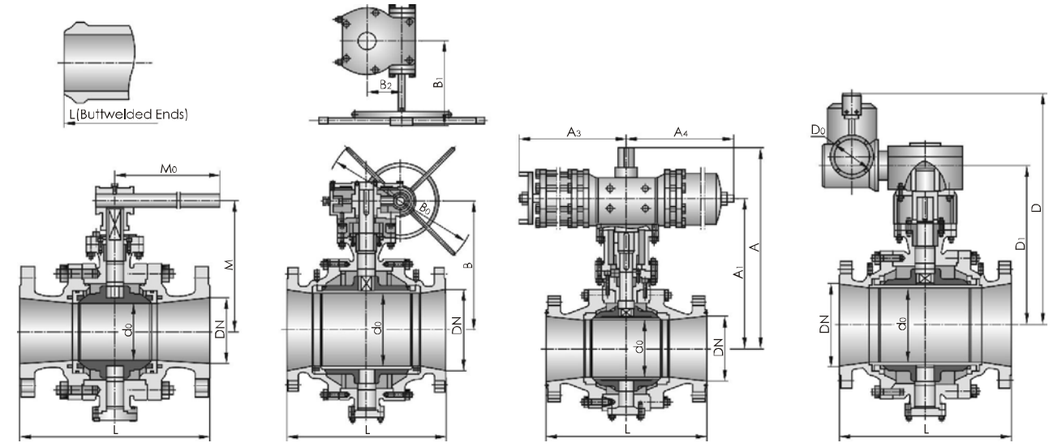

Lever Operated | Worm Gear Operated | Penumatic Operated | Eletric Operated

Main Outline Dimensions

PN1.6MPa Class150

mm

DN (mm)	NPS (in)	L			d	Handwheel		Worm Gear/Lever				Penumatic				Eletric			Weight(kg)	
		RF	BW	RTJ		M	M_0	B	B_0	B_1	B_2	A	A_1	A_3	A_4	D	D_1	D_0	RF	BW
80	3×2	203	283	216	49	107	230	-	-	-	-	217	174	89	181	-	-	-	19	15
100	4×3	229	305	241	74	152	400	-	-	-	-	318	258	148	257	-	-	-	32	24
150	6×4	394	457	406	100	178	650	-	-	-	-	407	322	287	287	-	-	-	55	48
200	8×6	457	521	470	150	272	1050	378	400	200	106	562	457	378	378	554	337	508	73	69
250	10×8	533	559	546	201	-	-	421	400	200	108	700	595	378	378	606	421	508	122	110
300	12×10	610	635	622	252	-	-	482	400	200	108	735	630	378	378	667	482	508	310	297
350	14×12	686	762	699	303	-	-	549	600	330	144	858	728	530	530	734	549	508	470	430
400	16×14	762	838	775	336	-	-	607	600	330	144	888	758	530	530	774	589	508	590	540
450	18×16	864	914	876	385	-	-	687	800	370	220	1319	1154	680	680	889	687	508	830	760
500	20×18	914	991	927	435	-	-	713	800	370	220	1354	1180	680	680	909	708	508	1040	940
600	24×20	1067	1143	1080	487	-	-	772	800	370	220	1459	1294	680	680	1023	772	305	1650	1110
750	30×24	1295	1397	-	589	-	-	995	800	515	279	1060	915	1455	1455	1268	995	305	4100	3170
900	36×30	1524	1727	-	735	-	-	1153	800	515	279	1195	1035	1665	1665	1515	1211	305	6450	4820

PN2.5、4.0MPa Class300

DN (mm)	NPS (in)	L			d	Handwheel		Worm Gear/Lever				Penumatic				Eletric			Weight(kg)	
		RF	BW	RTJ		M	M_0	B	B_0	B_1	B_2	A	A_1	A_3	A_4	D	D_1	D_0	RF	BW
80	3×2	283	283	298	49	107	230	-	-	-	-	234	174	148	257	-	-	-	28	20
100	4×3	305	305	321	74	152	400	-	-	-	-	343	258	287	287	-	-	-	38	28
150	6×4	403	403	419	100	178	650	-	-	-	-	407	322	287	287	-	-	-	67	54
200	8×6	502	521	517	150	272	1050	378	400	200	106	562	457	378	378	522	337	508	95	83
250	10×8	568	559	584	201	-	-	421	400	200	108	700	595	378	378	606	421	508	144	125
300	12×10	648	635	664	252	-	-	482	400	200	108	760	630	530	530	667	482	508	380	340
350	14×12	762	762	778	303	-	-	549	600	330	144	858	728	530	530	751	549	508	580	540
400	16×14	838	838	854	336	-	-	607	700	330	144	909	758	530	530	774	589	508	780	680
450	18×16	914	914	930	385	-	-	687	800	370	220	1319	1154	680	680	938	687	508	1190	1050
500	20×18	991	991	1010	435	-	-	713	800	370	220	1354	1180	680	680	909	708	508	1880	1690
600	24×20	1143	1143	1165	487	-	-	772	800	370	220	1459	1294	1455	1455	1045	772	305	2750	2180
750	30×24	1397	1397	1422	589	-	-	995	800	515	279	1075	915	1665	1665	1268	995	305	4810	3820
900	36×30	1727	1727	1756	735	-	-	1153	800	515	279	1195	1035	1960	1960	1515	1211	305	8440	6840

Note: Under "L" Bar in the chart, RF stands for RF (Raised Flange) structural length; BW stands for BW (Buttwelded Ends) structural length; RTJ stands for RTJ (Ring Joint) structural length.

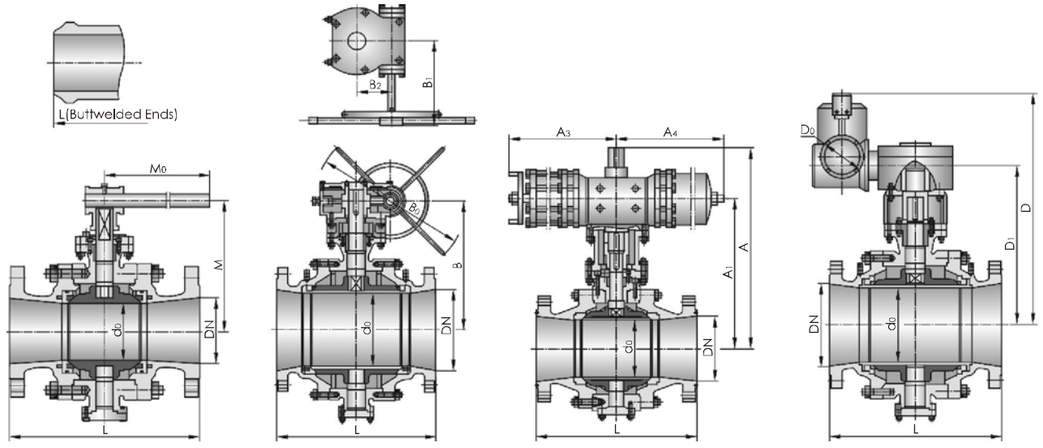

Lever Operated | Worm Gear Operated | Penumatic Operated | Eletric Operated

Main Outline Dimensions

PN6.4MPa Class400

mm

DN (mm)	NPS (in)	L			d	Handwheel		Worm Gear/Lever				Penumatic				Eletric			Weight(kg)	
		RF	BW	RTJ		M	M_0	B	B_0	B_1	B_2	A	A_1	A_3	A_4	D	D_1	D_0	RF	BW
80	3×2	356	356	359	49	107	400	-	-	-	-	234	174	148	257	-	-	-	37	26
100	4×3	406	406	410	74	152	650	-	-	-	-	343	258	287	287	-	-	-	66	47
150	6×4	495	495	498	100	178	650	-	-	-	-	407	322	287	287	-	-	-	128	81
200	8×6	597	597	600	150	272	1050	383	400	200	108	562	457	378	378	522	337	508	296	252
250	10×8	673	673	676	201	-	-	447	600	330	144	725	595	530	530	606	421	508	456	384
300	12×10	762	762	765	252	-	-	480	600	330	144	760	630	530	530	667	482	508	648	544
350	14×12	826	826	829	303	-	-	517	800	370	220	943	728	680	680	751	549	508	950	795
400	16×14	902	902	905	303	-	-	517	800	370	220	943	728	680	680	751	549	508	1053	882
450	18×16	978	978	981	385	-	-	639	800	370	220	1299	1154	1455	1455	938	687	305	1512	1265
500	20×16	1054	1054	1060	385	-	-	639	800	370	220	1299	1154	1455	1455	938	687	305	1925	1605
600	24×20	1232	1232	1241	487	-	-	744	800	515	279	1459	1294	1455	1455	1045	772	305	3125	2610
750	30×24	1524	1524	1537	589	-	-	869	800	515	279	1075	915	1665	1665	1268	995	305	5385	4490
900	36×30	1880	1880	1895	735	-	-	1013	800	570	368	1195	1035	1960	1960	1515	1211	305	8960	7470

PN10.0MPa Class600

DN (mm)	NPS (in)	L			d	Handwheel		Worm Gear/Lever				Penumatic				Eletric			Weight(kg)	
		RF	BW	RTJ		M	M_0	B	B_0	B_1	B_2	A	A_1	A_3	A_4	D	D_1	D_0	RF	BW
80	3×2	356	356	359	49	107	400	-	-	-	-	234	174	148	257	-	-	-	44	34
100	4×3	432	432	435	74	152	650	-	-	-	-	343	258	287	287	-	-	-	89	65
150	6×4	559	559	562	100	178	1050	-	-	-	-	407	322	287	287	-	-	-	160	110
200	8×6	660	660	664	150	-	-	389	400	200	108	500	395	378	378	522	337	508	310	240
250	10×8	787	787	791	201	-	-	449	600	330	144	562	457	378	378	606	421	508	570	500
300	12×10	838	838	841	252	-	-	497	600	330	144	725	595	530	530	684	482	508	850	680
350	14×12	889	889	892	303	-	-	550	800	370	220	760	630	530	530	751	549	508	1180	970
400	16×12	991	991	994	303	-	-	550	800	370	220	760	630	530	530	751	549	508	1390	1140
450	18×16	1092	1092	1095	385	-	-	687	800	370	220	1319	1154	1455	1455	960	687	305	1765	1415
500	20×16	1194	1194	1200	385	-	-	687	800	370	220	1319	1154	1455	1455	960	687	305	2170	1690
600	24×20	1397	1397	1407	487	-	-	780	800	515	279	1459	1294	1665	1665	1045	772	305	3390	2540
750	30×24	1651	1651	1664	589	-	-	995	800	515	279	1075	915	1665	1665	1328	995	305	5910	4470
900	36×30	2083	2083	2099	735	-	-	1157	800	570	368	1195	1035	1960	1960	1661	1211	305	10560	8460

Note: Under "L" Bar in the chart, RF stands for RF (Raised Flange) structural length; BW stands for BW (Buttwelded Ends) structural length; RTJ stands for RTJ (Ring Joint) structural length.

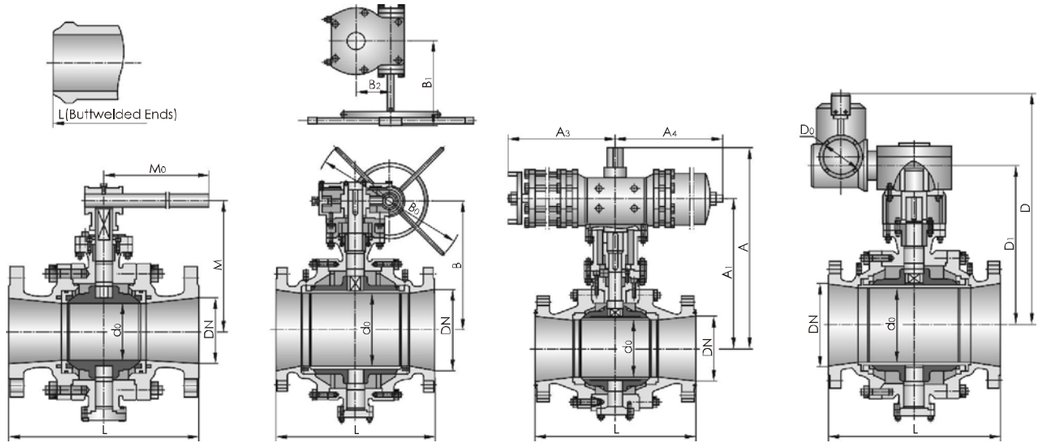

Lever Operated | Worm Gear Operated | Penumatic Operated | Eletric Operated

Main Outline Dimensions

Class900

mm

DN (mm)	NPS (in)	L			d	Handwheel		Worm Gear/Lever				Penumatic				Eletric			Weight(kg)	
		RF	BW	RTJ		M	M_0	B	B_0	B_1	B_2	A	A_1	A_3	A_4	D	D_1	D_0	RF	BW
80	3×2	381	381	384	49	123	650	-	-	-	-	234	174	148	257	-	-	-	58	48
100	4×3	457	457	460	74	-	-	185	400	200	106	343	258	287	287	-	-	-	105	90
150	6×4	610	610	613	100	-	-	225	400	200	108	427	322	378	378	-	-	-	230	162
200	8×6	737	737	740	150	-	-	389	600	330	144	587	457	530	530	522	337	508	470	370
250	10×8	838	838	841	201	-	-	449	600	330	144	725	595	530	530	606	421	508	530	410
300	12×10	965	965	968	252	-	-	497	800	370	220	795	630	680	680	684	482	508	1200	1030
350	14×12	1029	1029	1038	303	-	-	550	800	370	220	837	728	1455	1455	822	549	508	1695	1440
400	16×12	1130	1130	1140	303	-	-	550	800	370	220	837	728	1455	1455	822	549	508	1790	1480
450	18×16	1219	1219	1232	373	-	-	687	800	515	279	1314	1154	1665	1665	991	687	305	2520	2100
500	20×16	1321	1321	1334	373	-	-	687	800	515	279	1314	1154	1665	1665	991	687	305	2970	2430
600	24×20	1549	1549	1568	471	-	-	780	800	515	279	1459	1294	1665	1665	1105	772	305	5580	4520
750	30×24	1880	1880	1902	570	-	-	995	800	515	279	1075	915	1960	1960	1445	995	305	8980	7907
900	36×30	2286	2286	2315	712	-	-	1157	800	570	368	-	-	-	-	1661	1211	305	15650	13910

Class1500

DN (mm)	NPS (in)	L			d	Worm Gear/Lever				Penumatic				Eletric			Weight(kg)	
		RF	BW	RTJ		B	B_0	B_1	B_2	A	A_1	A_3	A_4	D	D_1	D_0	RF	BW
80	3×2	470	470	473	49	154	400	200	106	259	174	287	287	-	-	-	75	49
100	4×3	546	546	549	74	187	600	330	144	363	258	378	378	-	-	-	130	73
150	6×4	705	705	711	100	217	600	330	144	452	322	530	530	-	-	-	300	181
200	8×6	832	832	841	144	346	800	370	220	587	457	530	530	522	337	508	615	491
250	10×8	991	991	1000	192	384	800	370	220	760	595	680	680	623	421	508	1085	879
300	12×10	1130	1130	1146	239	452	800	370	220	739	630	1455	1455	755	482	508	1850	1547
350	14×12	1257	1257	1276	287	512	800	515	279	837	728	1455	1455	822	549	508	2620	2214
400	16×12	1384	1384	1407	287	512	800	515	279	837	728	1455	1455	822	549	508	2890	2365
450	18×16	1537	1537	1559	360	601	800	515	279	1314	1154	1665	1665	1020	687	305	3856	3156
500	20×16	1664	1664	1686	360	601	800	515	279	1314	1154	1665	1665	1020	687	305	5005	4105
600	24×20	1943	1943	1972	416	727	800	570	368	1459	1294	1960	1960	1272	772	305	11377	9980
750	30×24	2251	2251	2281	498	803	800	570	368	1075	915	1960	1960	1445	995	305	17914	14660
900	36×30	2556	2556	2590	625	1070	960	575	220	-	-	-	-	1661	1211	305	32976	27743

Class2500

DN (mm)	NPS (in)	L			d	Worm Gear/Lever				Penumatic				Eletric			Weight(kg)	
		RF	BW	RTJ		B	B_0	B_1	B_2	A	A_1	A_3	A_4	D	D_1	D_0	RF	BW
80	3×2	578	578	584	42	174	600	330	144	259	174	287	287	-	-	-	165	111
100	4×3	673	673	683	62	224	800	370	220	388	258	530	530	-	-	-	280	166
150	6×4	914	914	927	87	268	800	370	220	452	322	530	530	-	-	-	540	302
200	8×6	1022	1022	1038	131	371	800	370	220	622	457	680	680	539	337	508	990	860
250	10×8	1270	1270	1292	179	420	800	515	279	704	595	1455	1455	694	421	508	1750	1270
300	12×10	1422	1422	1445	223	540	800	515	279	739	630	1455	1455	755	482	508	2650	1920
350	14×12	1540	1540	1569	265	638	800	515	279	888	728	1665	1665	853	549	305	4610	3855
400	16×12	1567	1567	1596	265	638	800	515	279	888	728	1665	1665	853	549	305	5145	4295
450	18×16	1825	1825	1854	276	764	800	570	368	1314	1154	1665	1665	1020	687	305	7395	6170
500	20×16	1875	1875	1904	276	764	800	570	368	1314	1154	1665	1665	1020	687	305	8900	7430
600	24×20	2257	2257	2286	343	867	800	570	368	1459	1294	1960	1960	1272	772	305	12190	10440

Note: Under "L" Bar in the chart, RF stands for RF (Raised Flange) structural length; BW stands for BW (Buttwelded Ends) structural length; RTJ stands for RTJ (Ring Joint) structural length.